
LEGO
STAR WARS
Boba Fett's
Mini Slave I™
STAR WARS
CELEBRATION
EXCLUSIVE

# 1

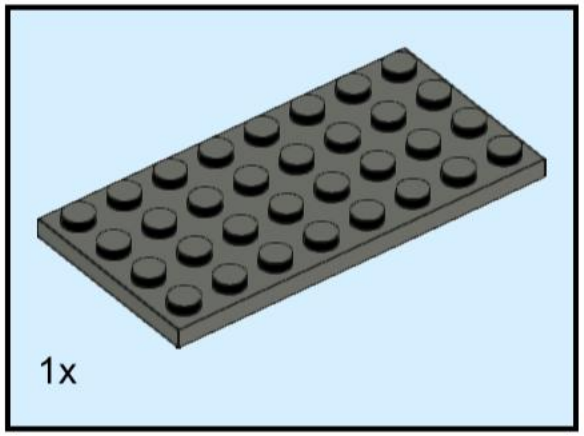


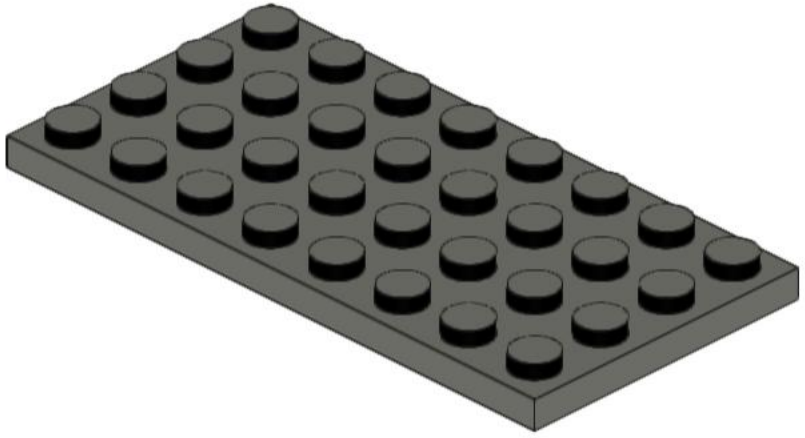

# 2

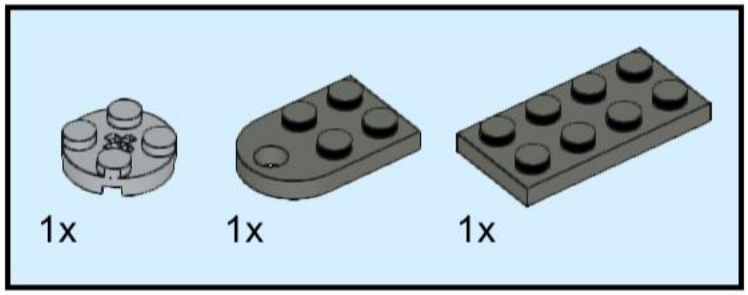


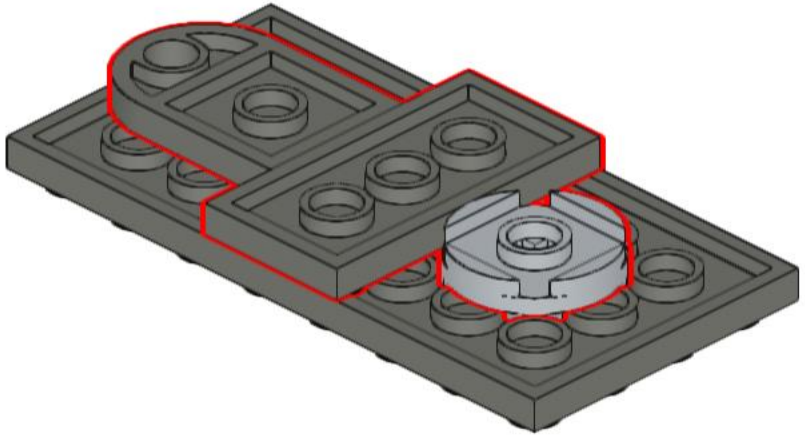

# 3

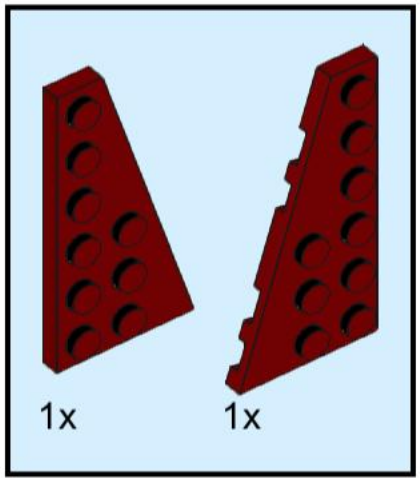


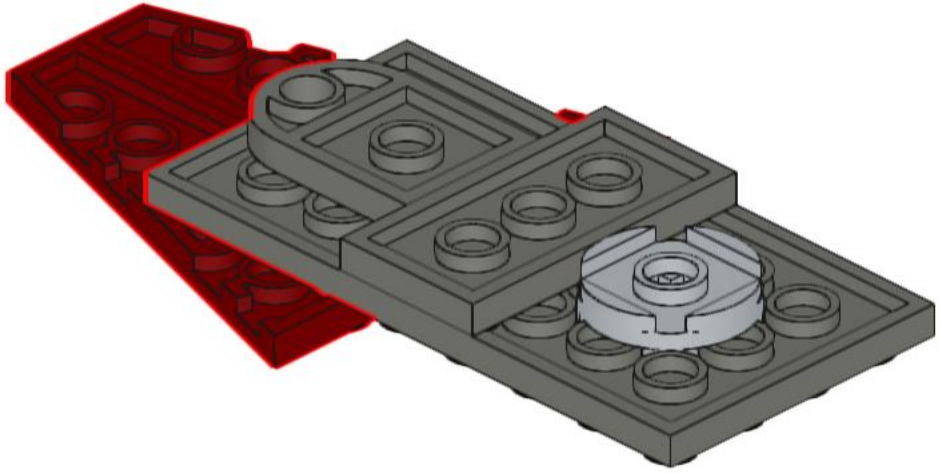

# 4



1x

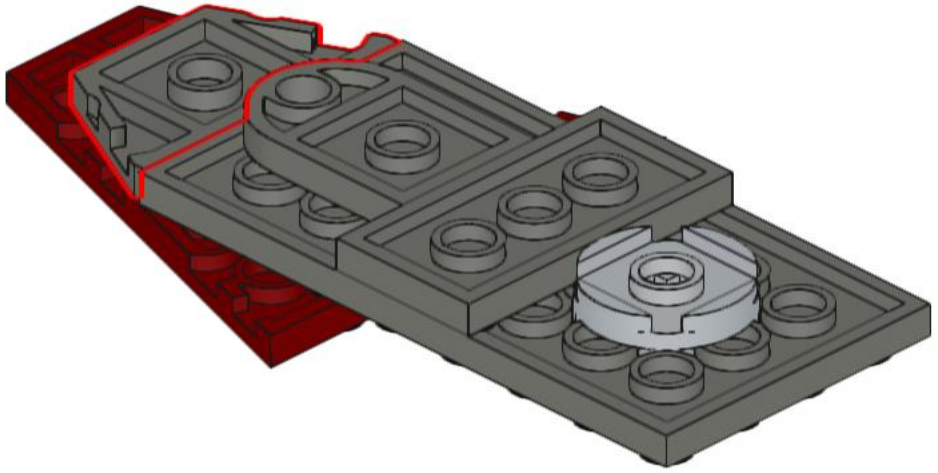

# 5

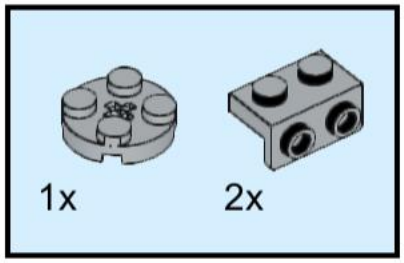




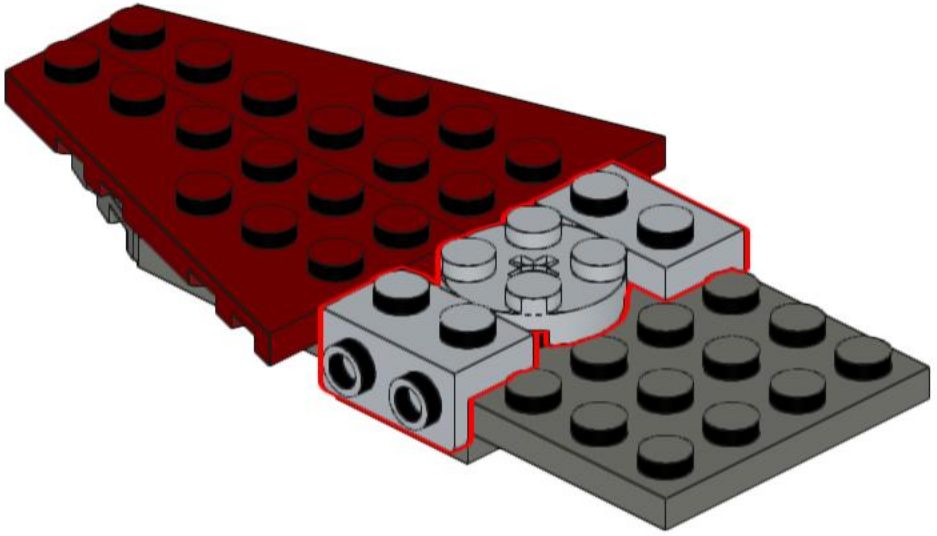

# 6

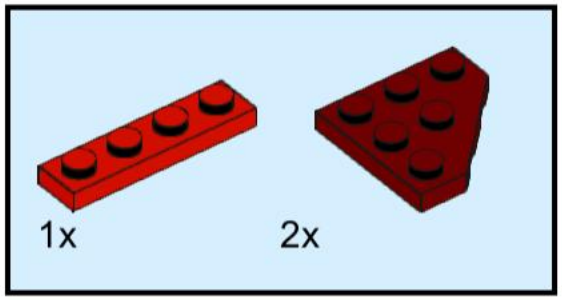


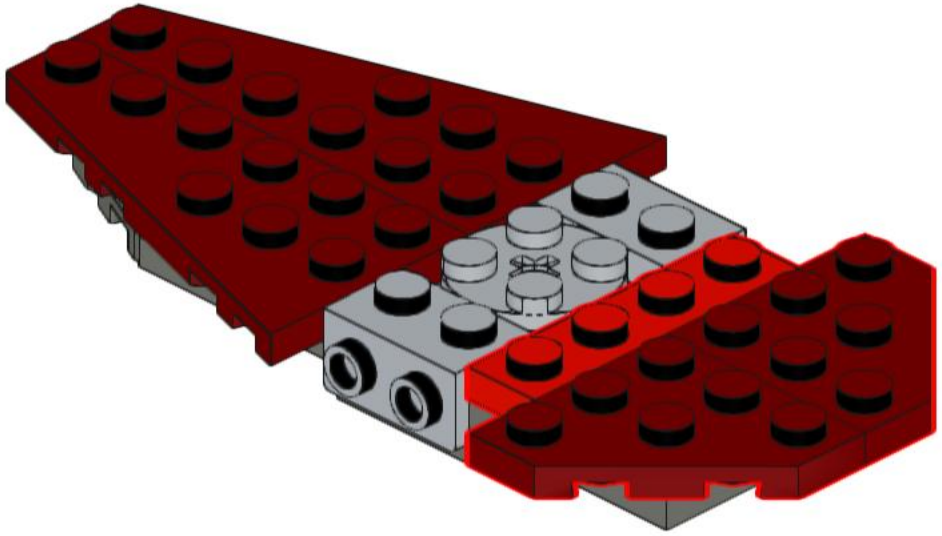

# 7

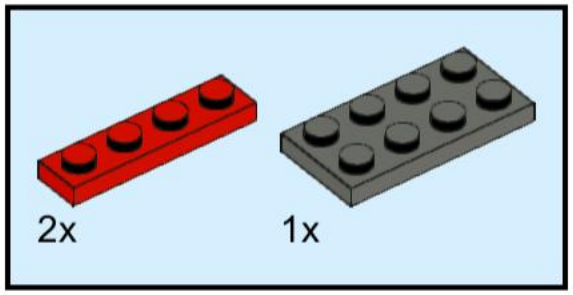


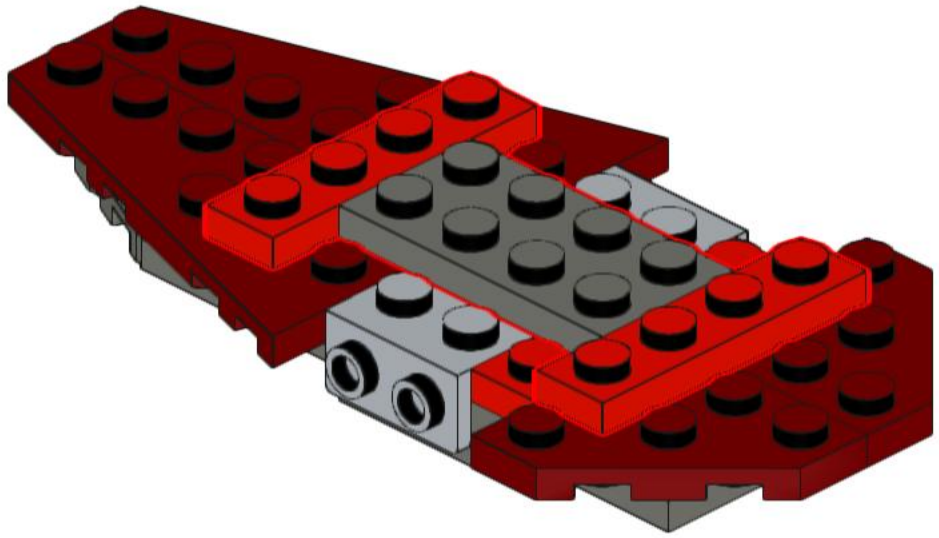

# 8

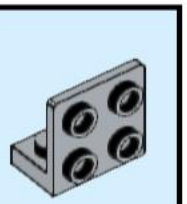


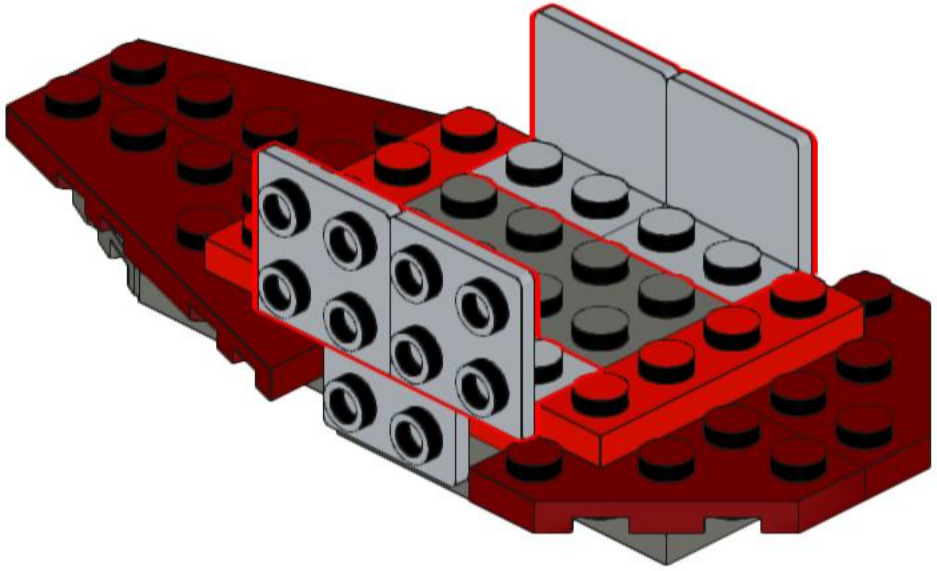

# 9

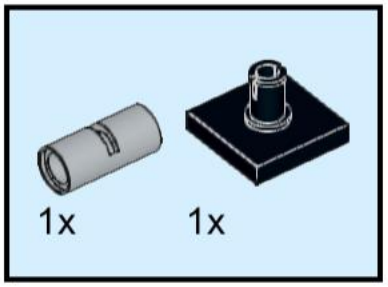


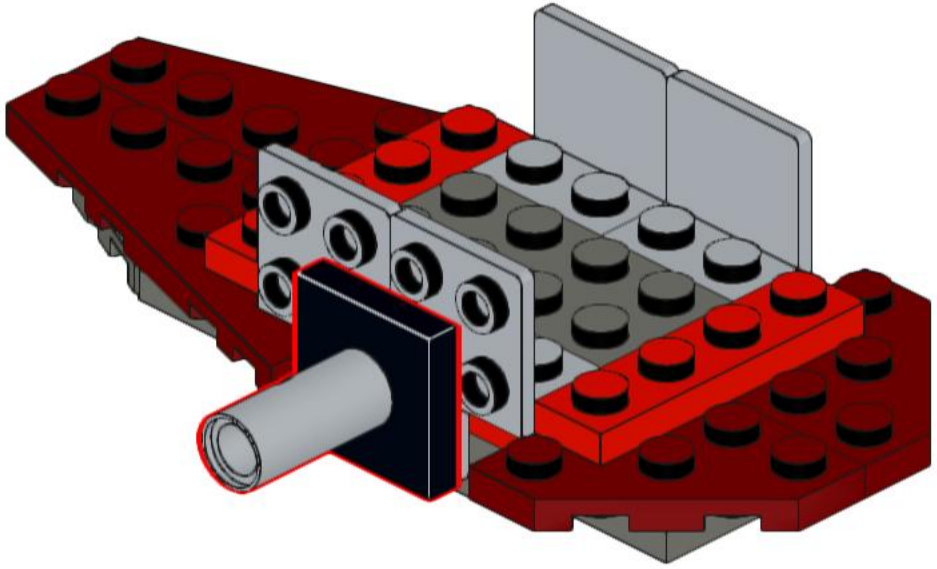

# 10

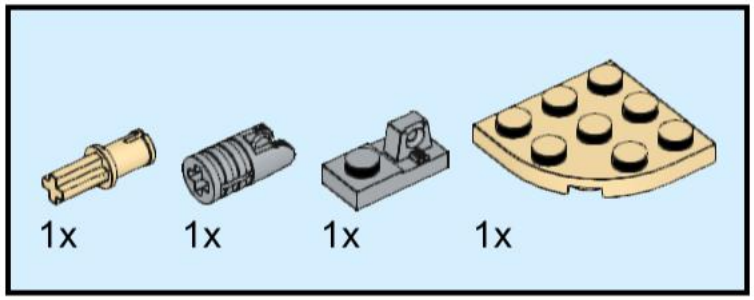


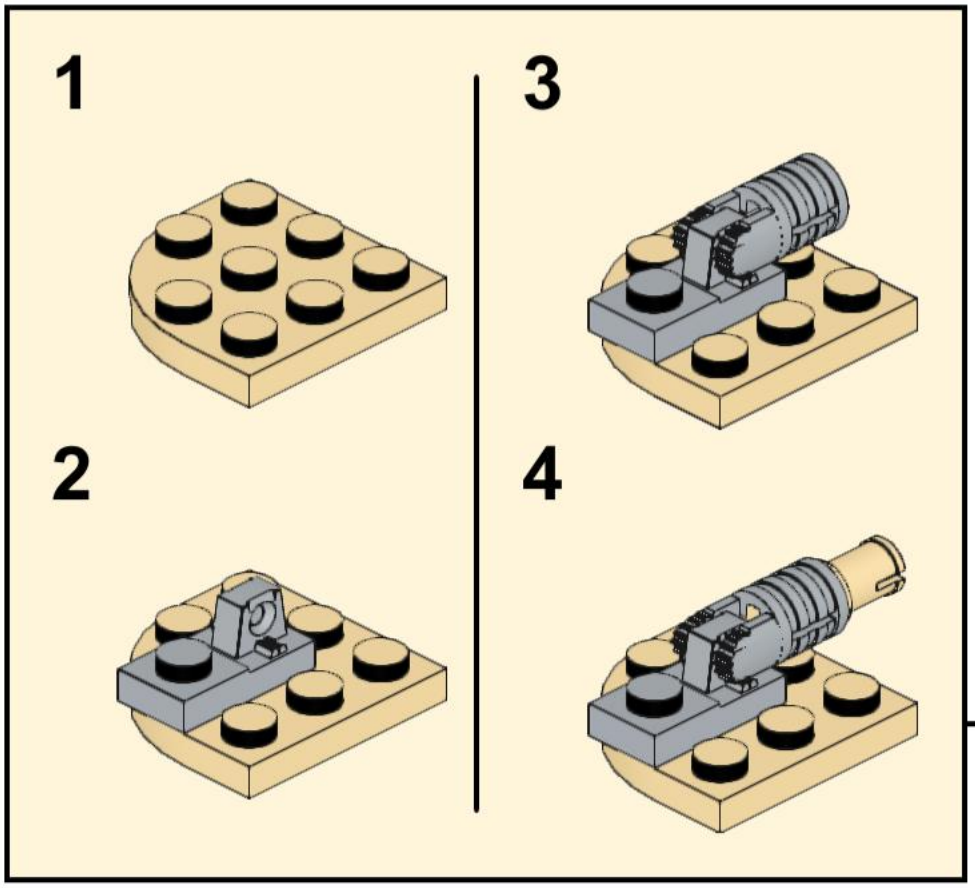


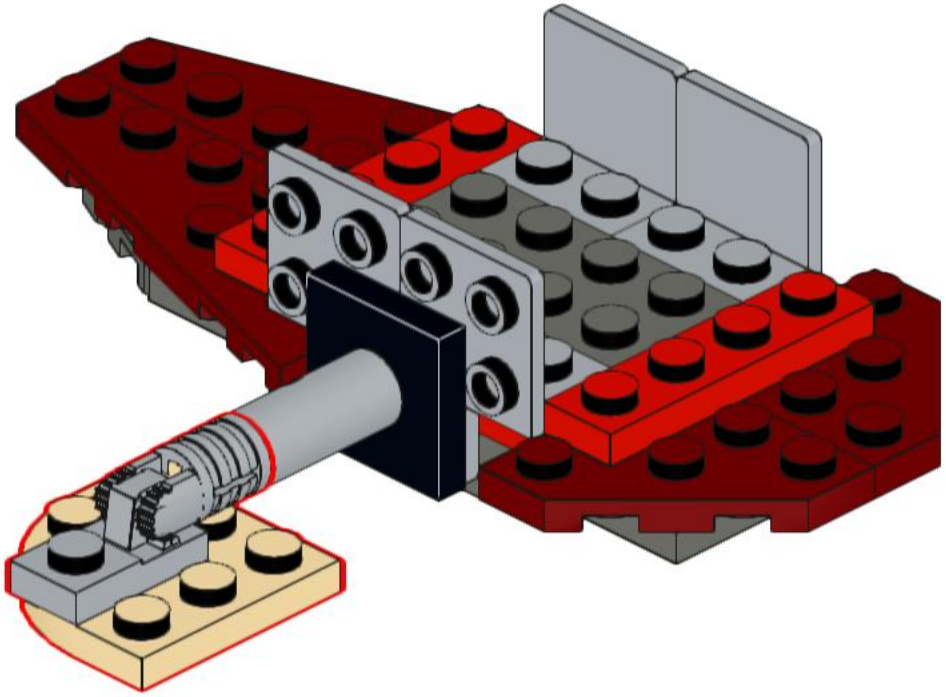

# 11

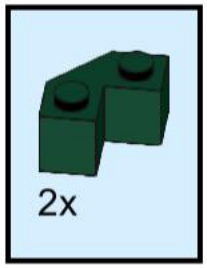


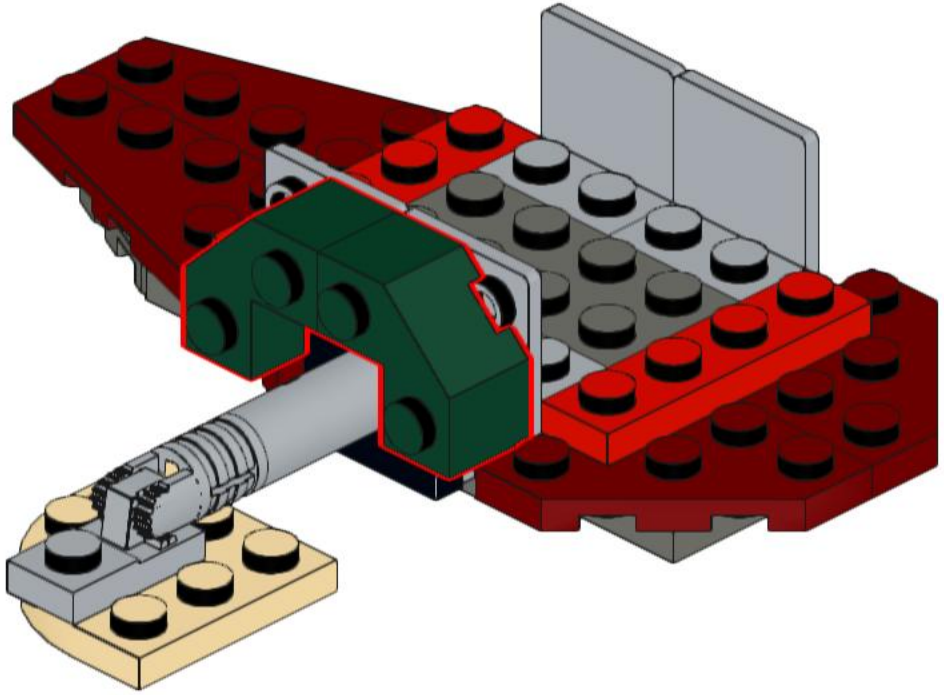

# 12

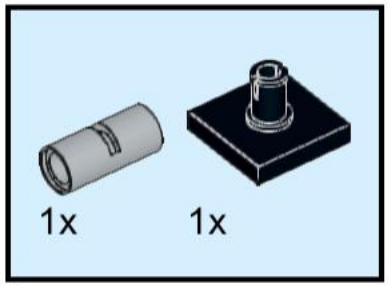


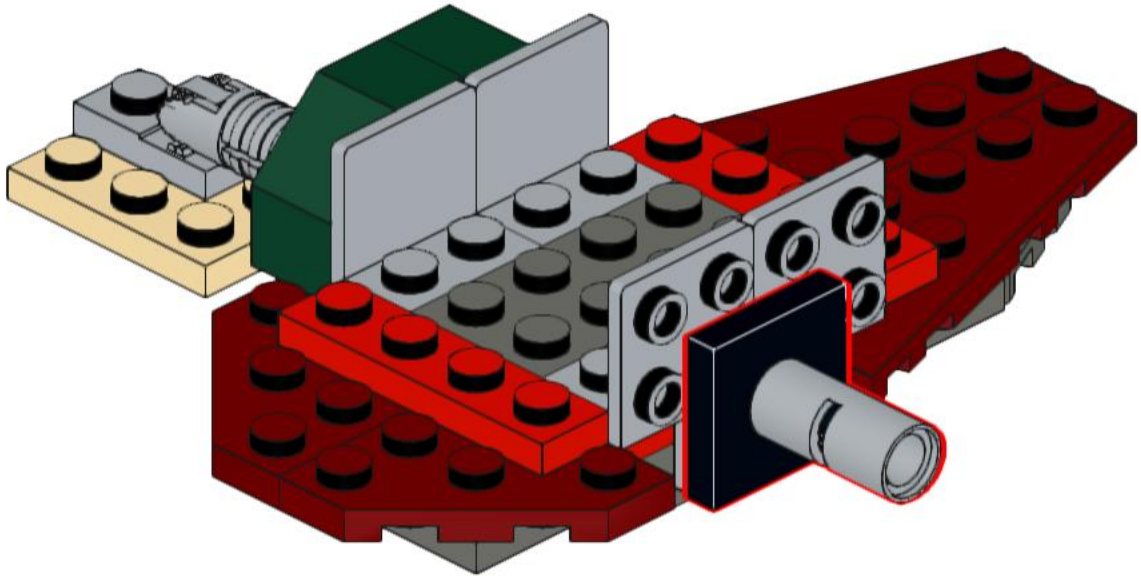

# 13

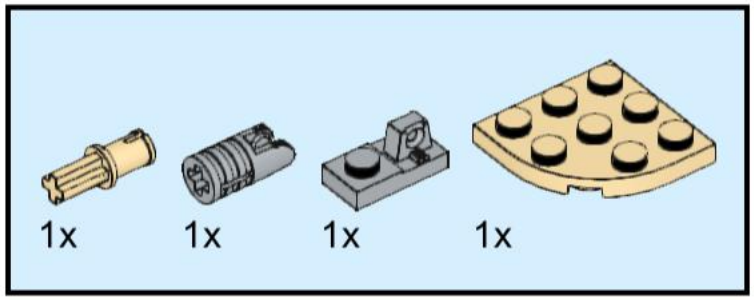


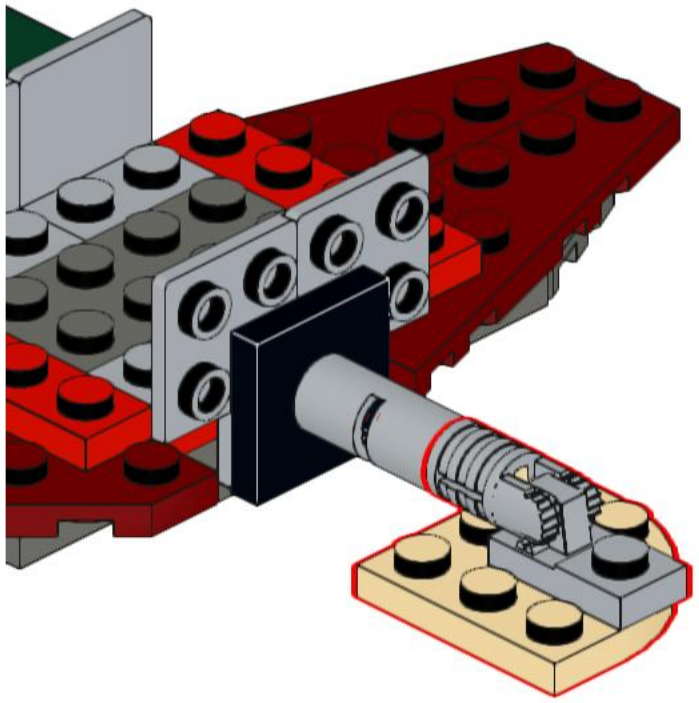

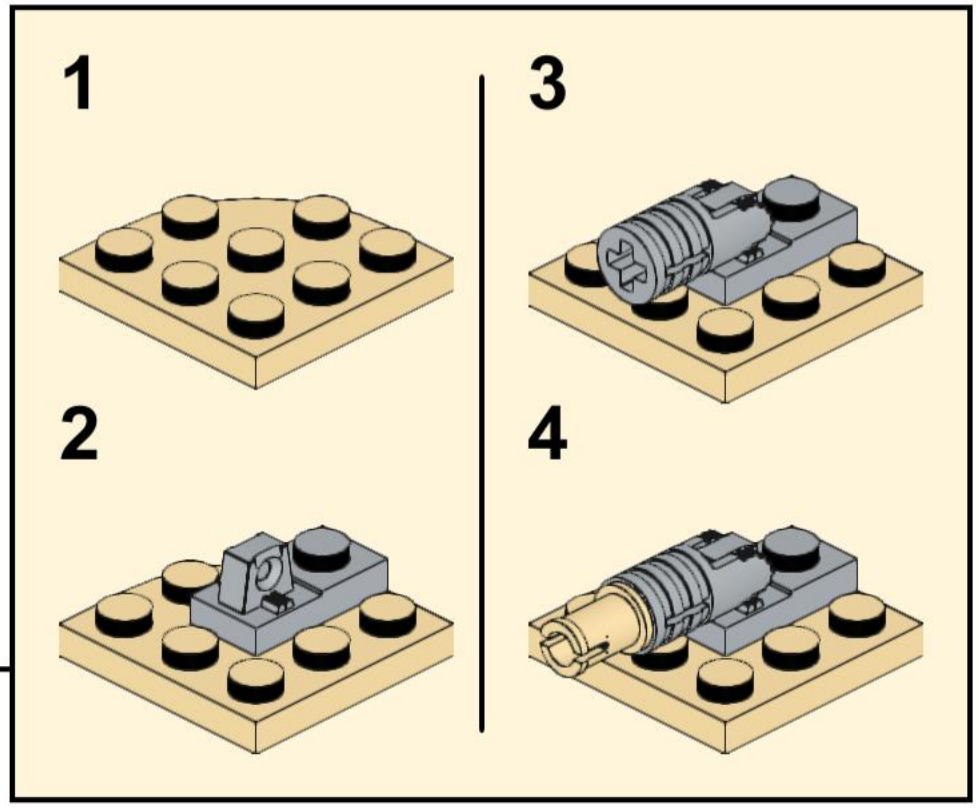

# 14

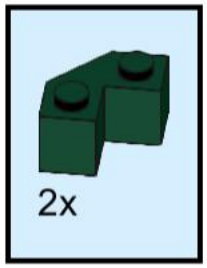


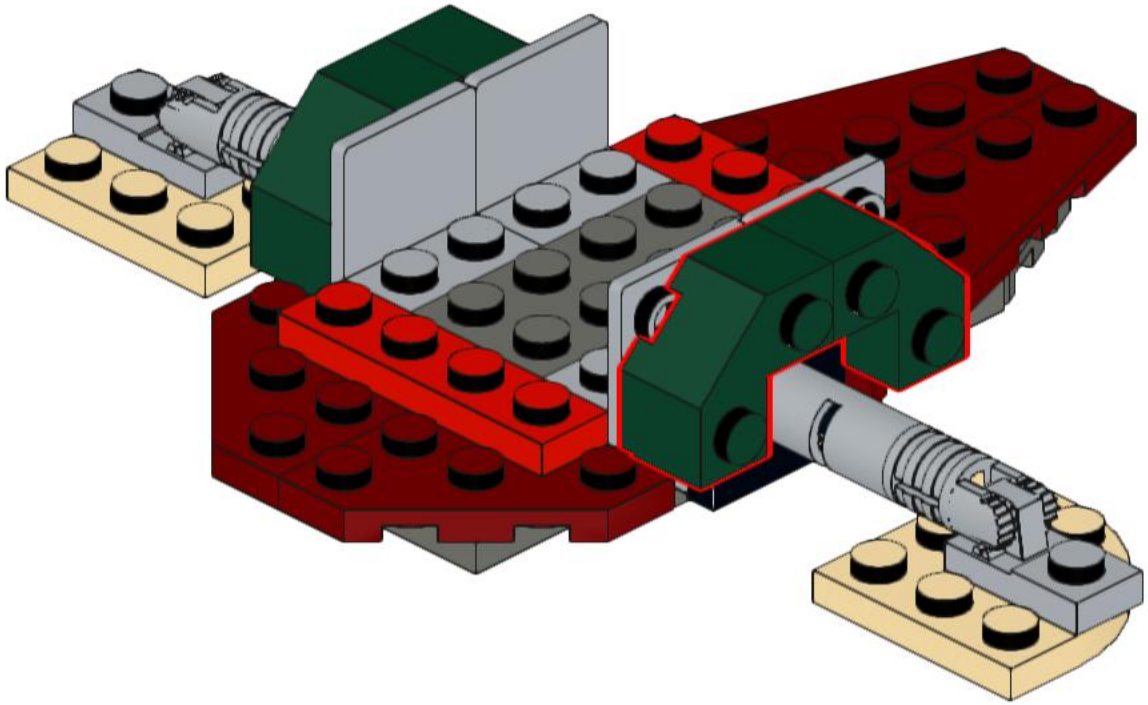

# 15

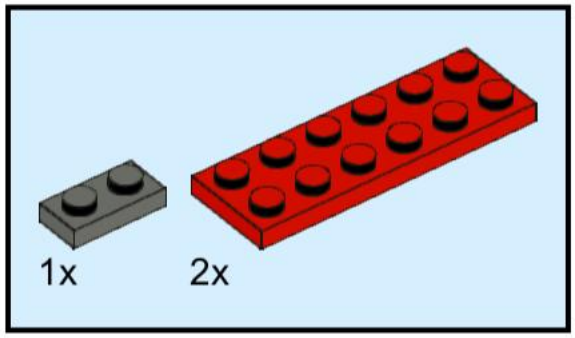


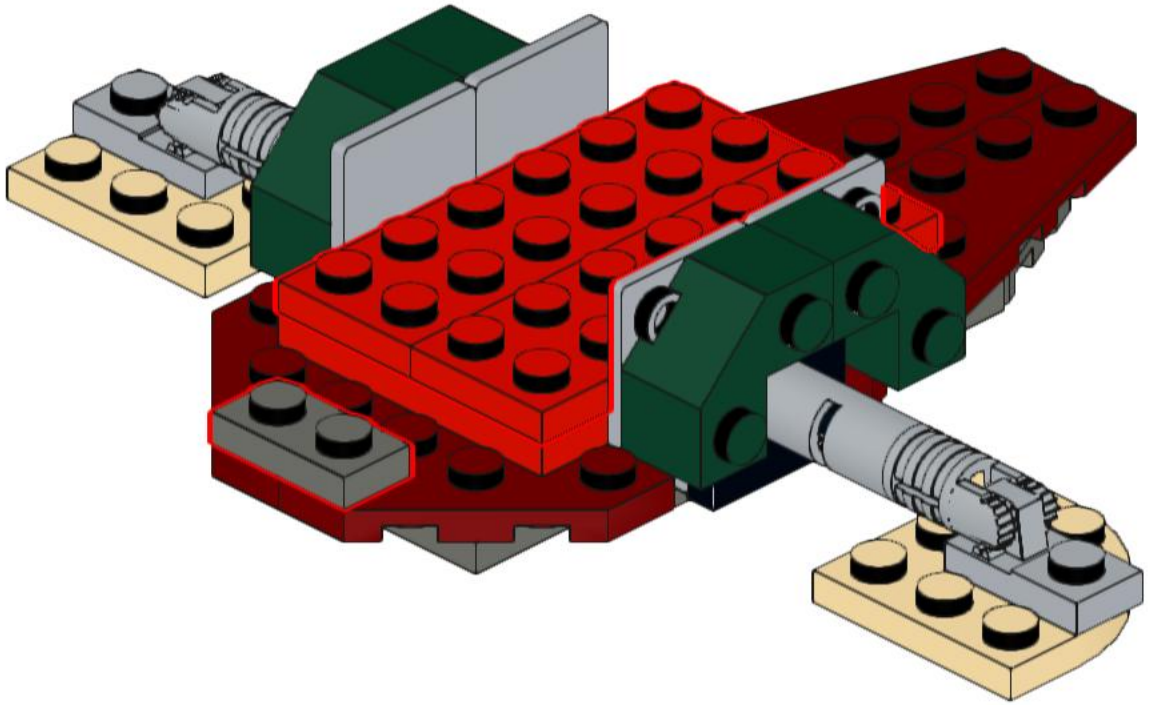

# 16

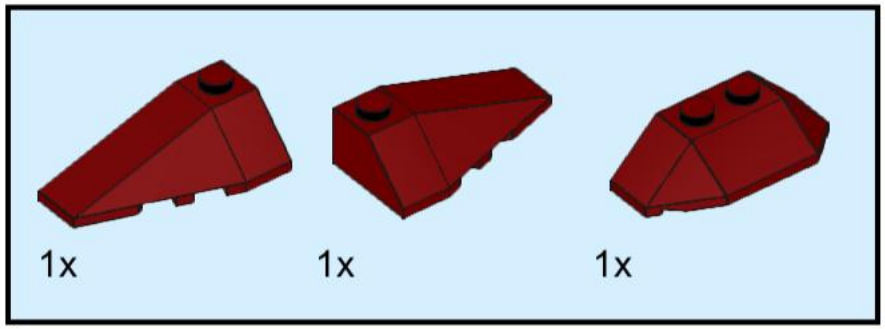


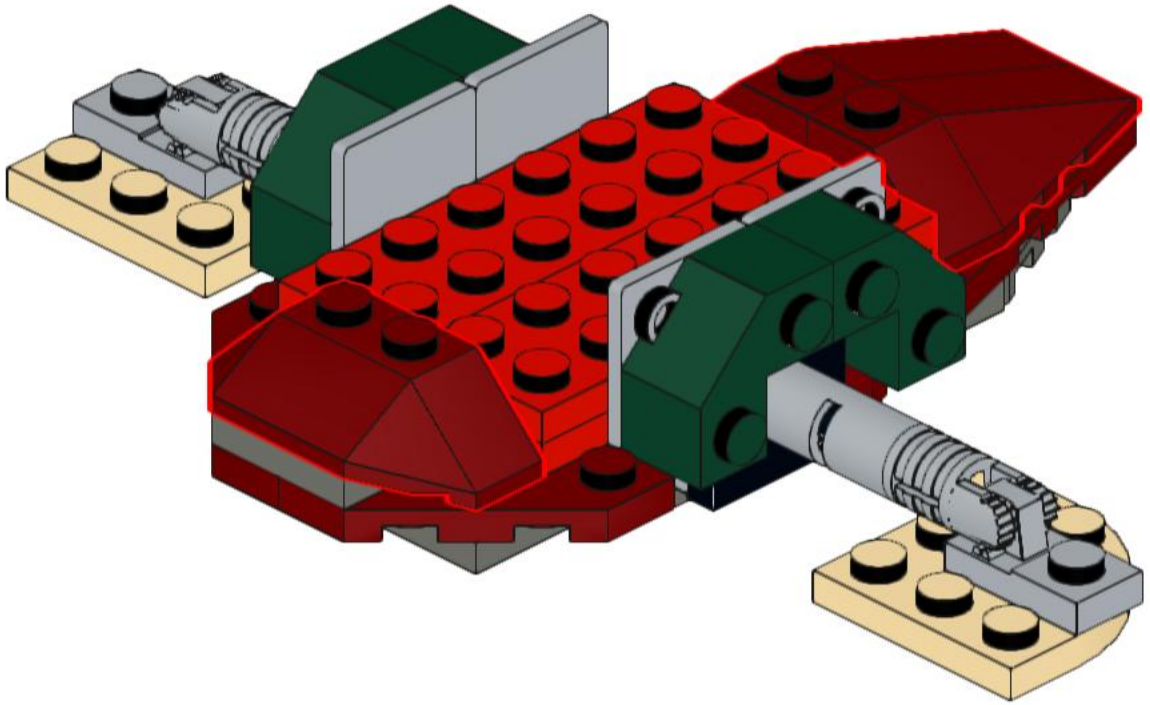

# 17

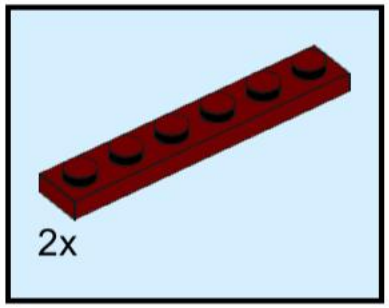


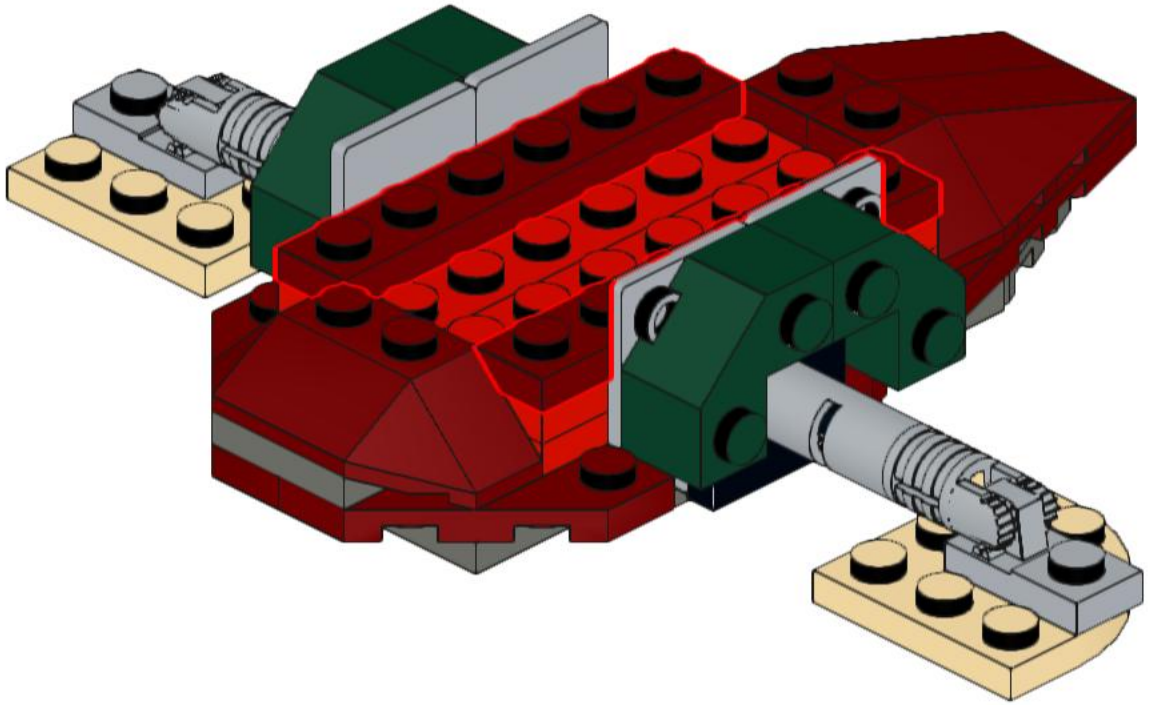

# 18

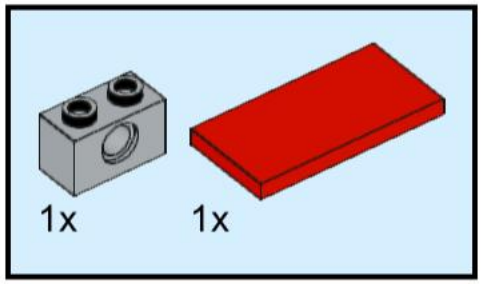


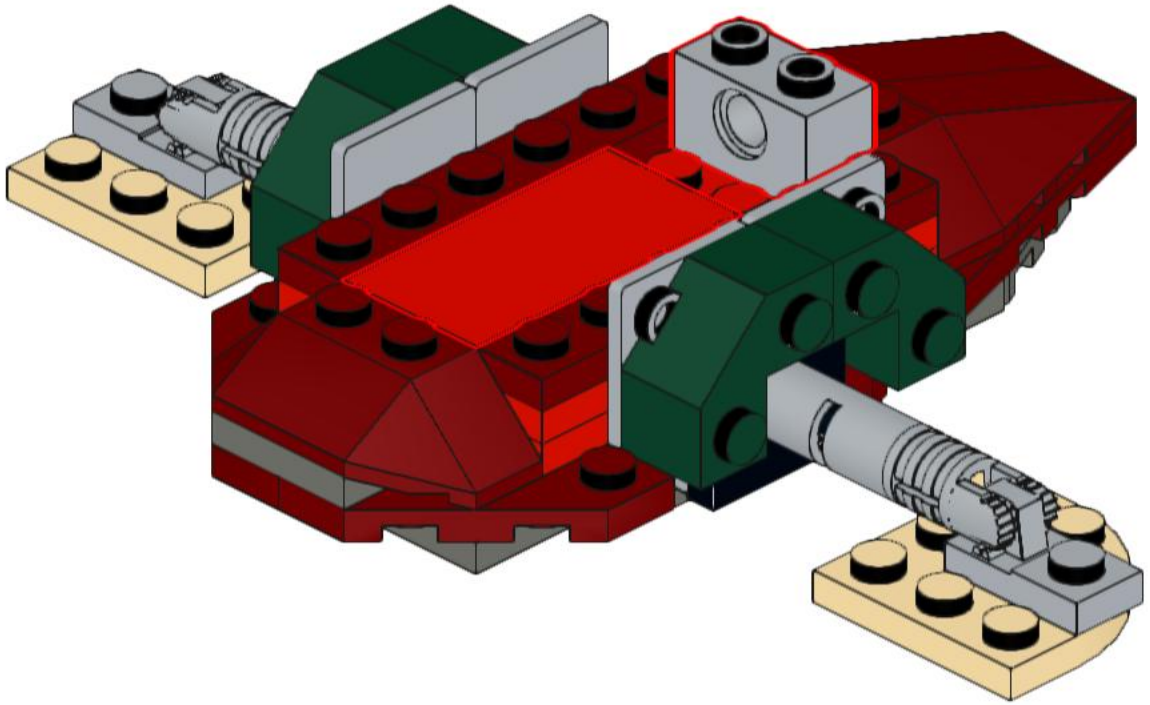

# 19

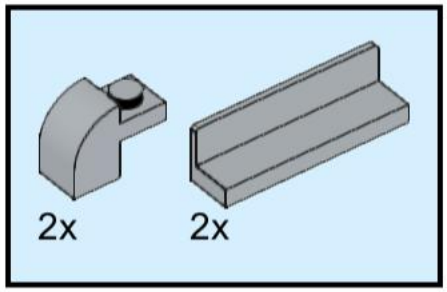


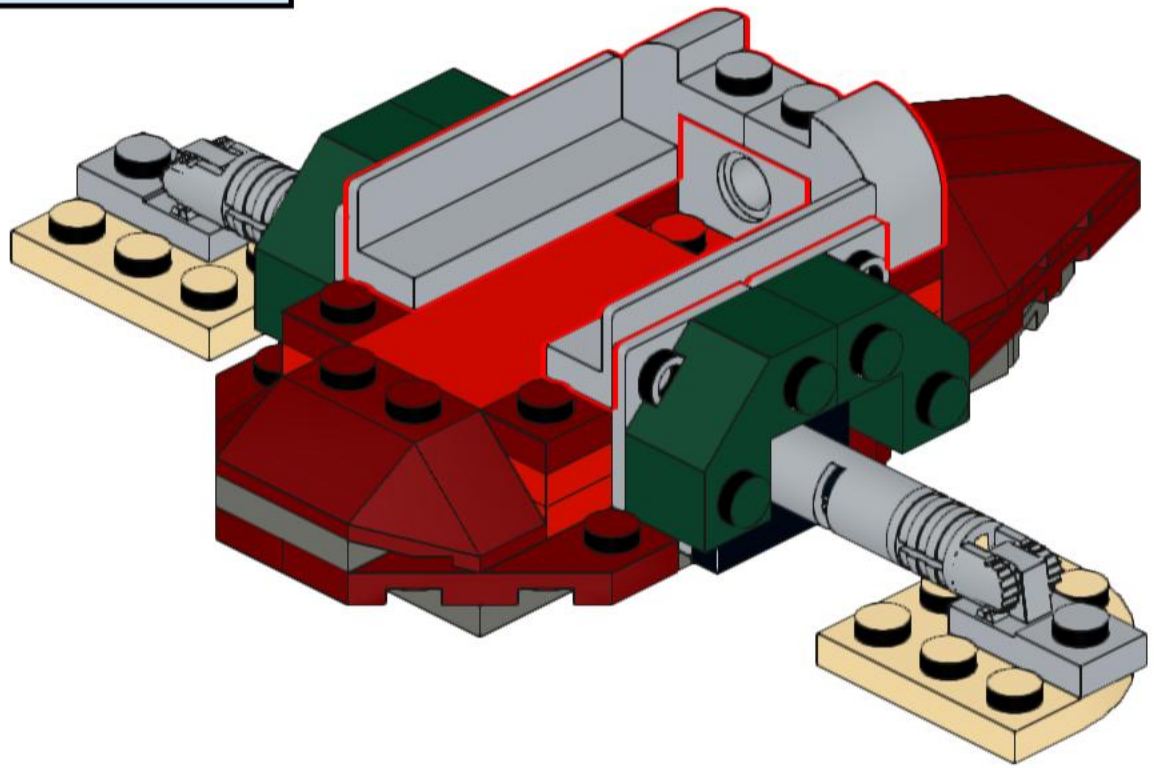

# 20

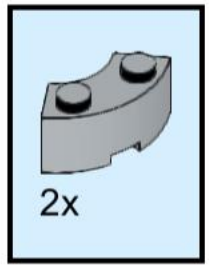


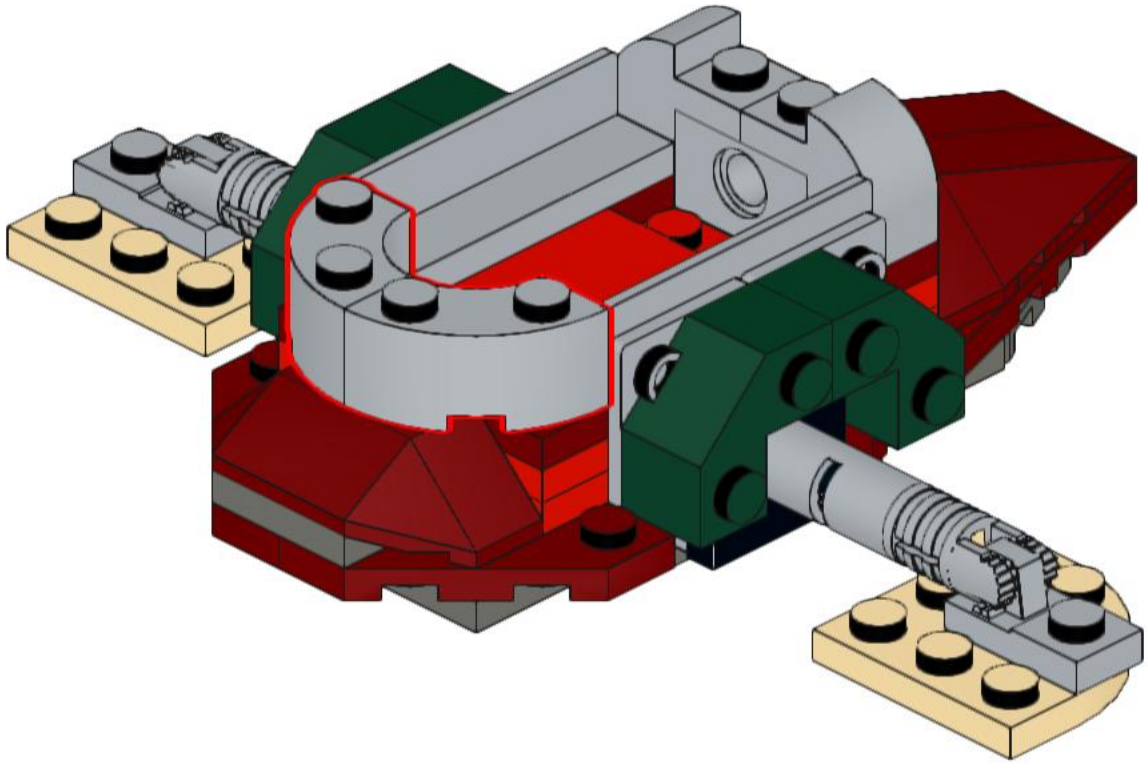

# 21

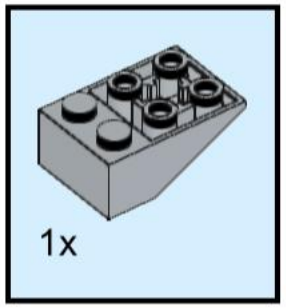


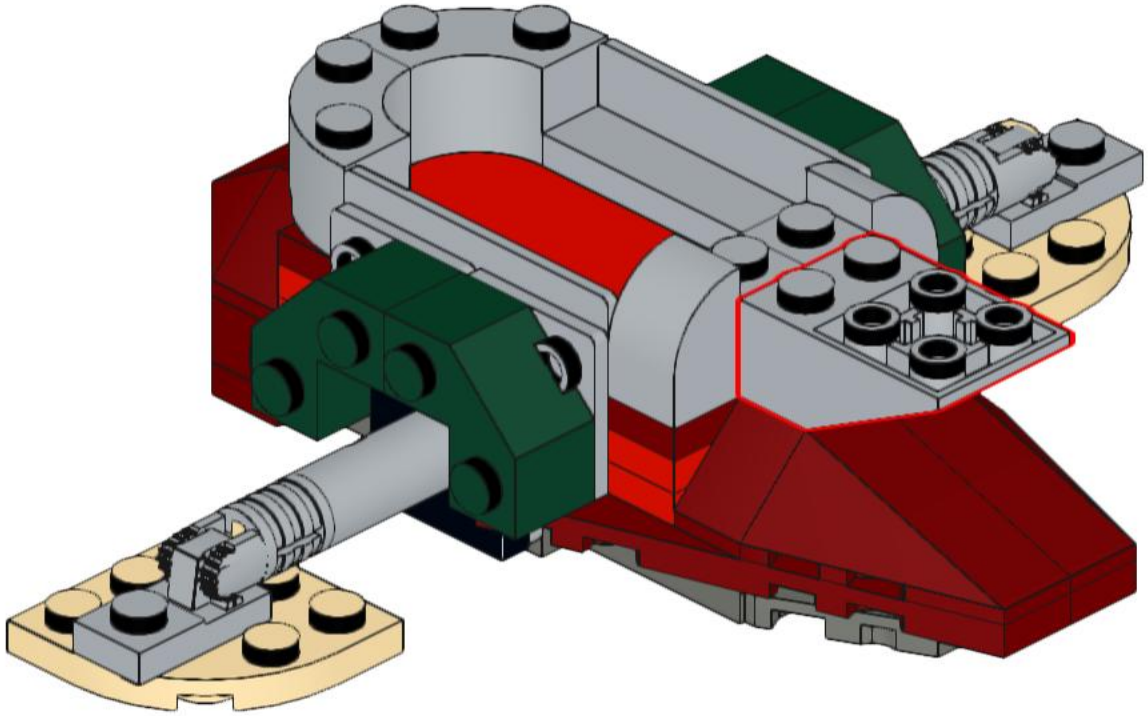

# 22

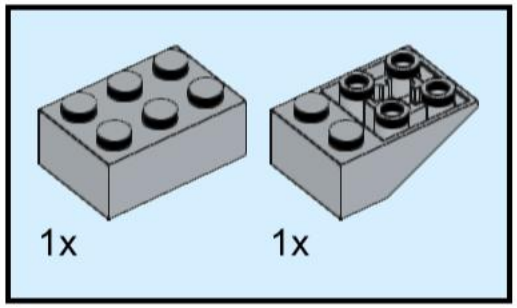


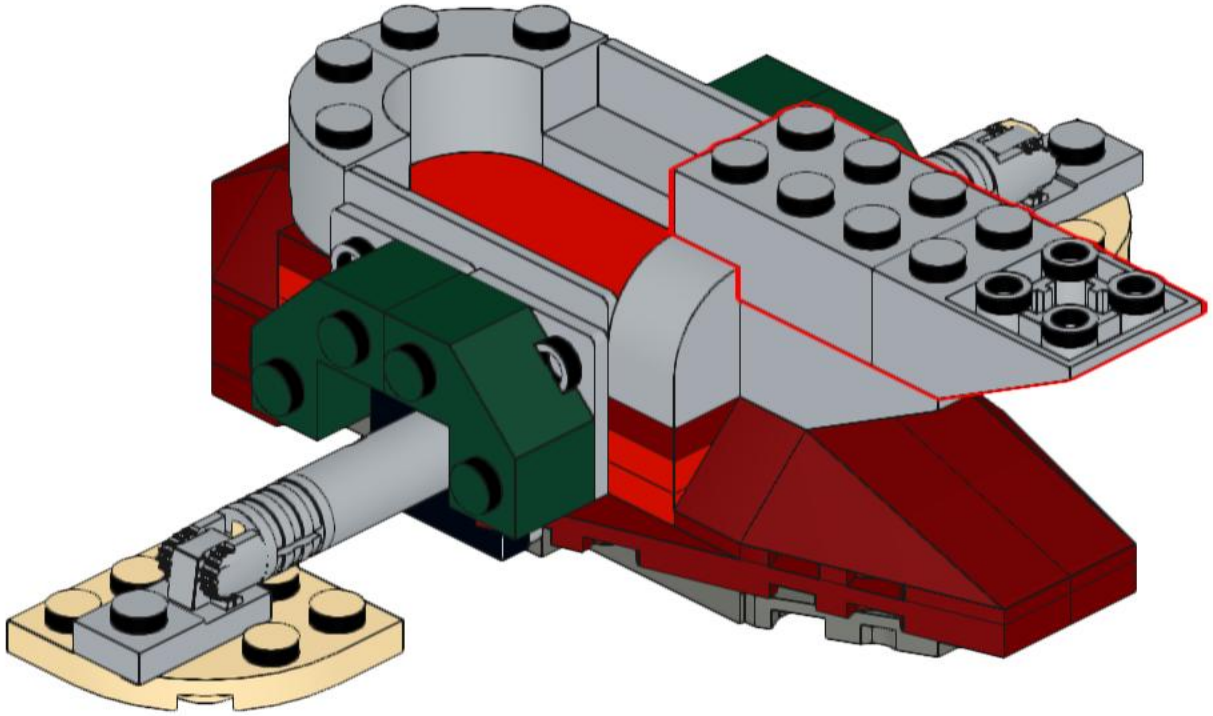

# 23

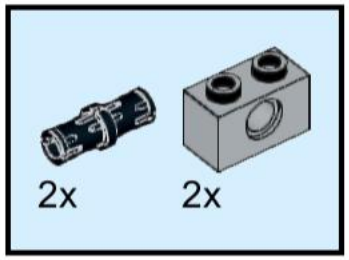


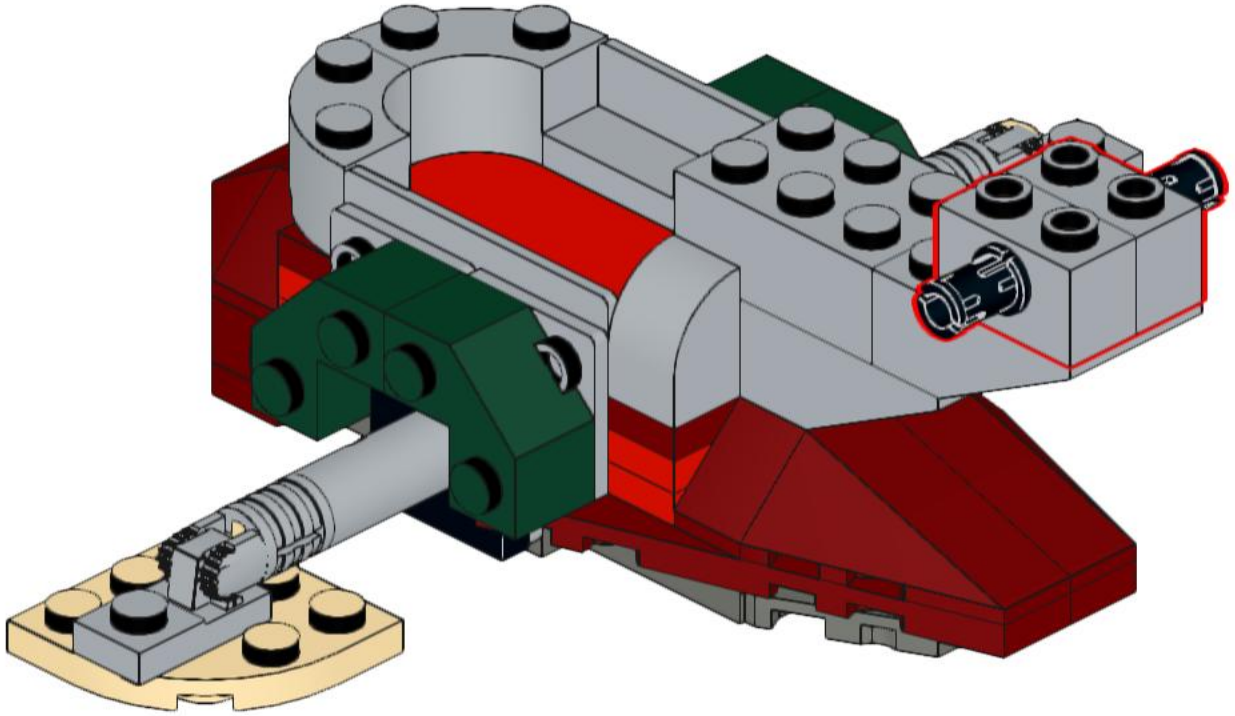

# 24

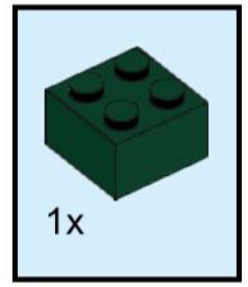


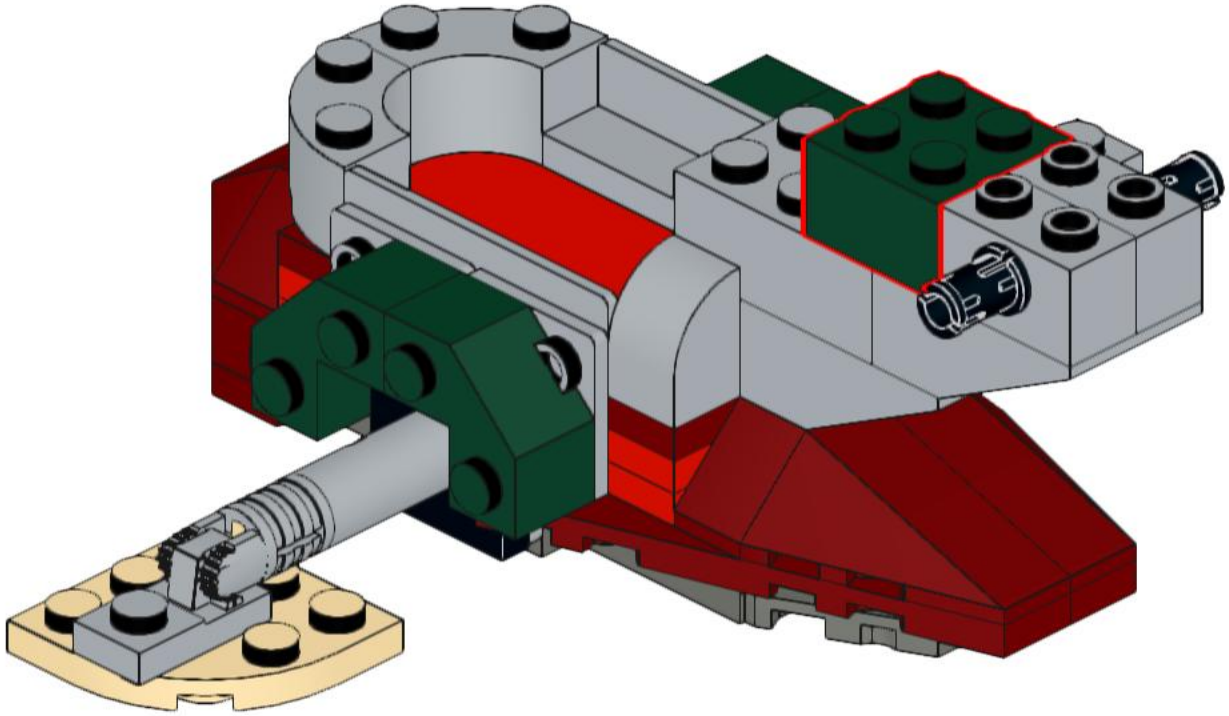

# 25

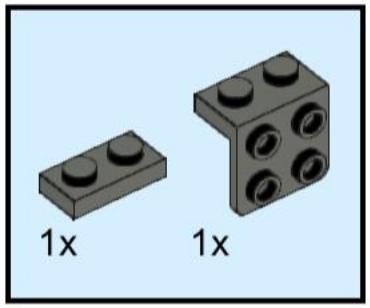


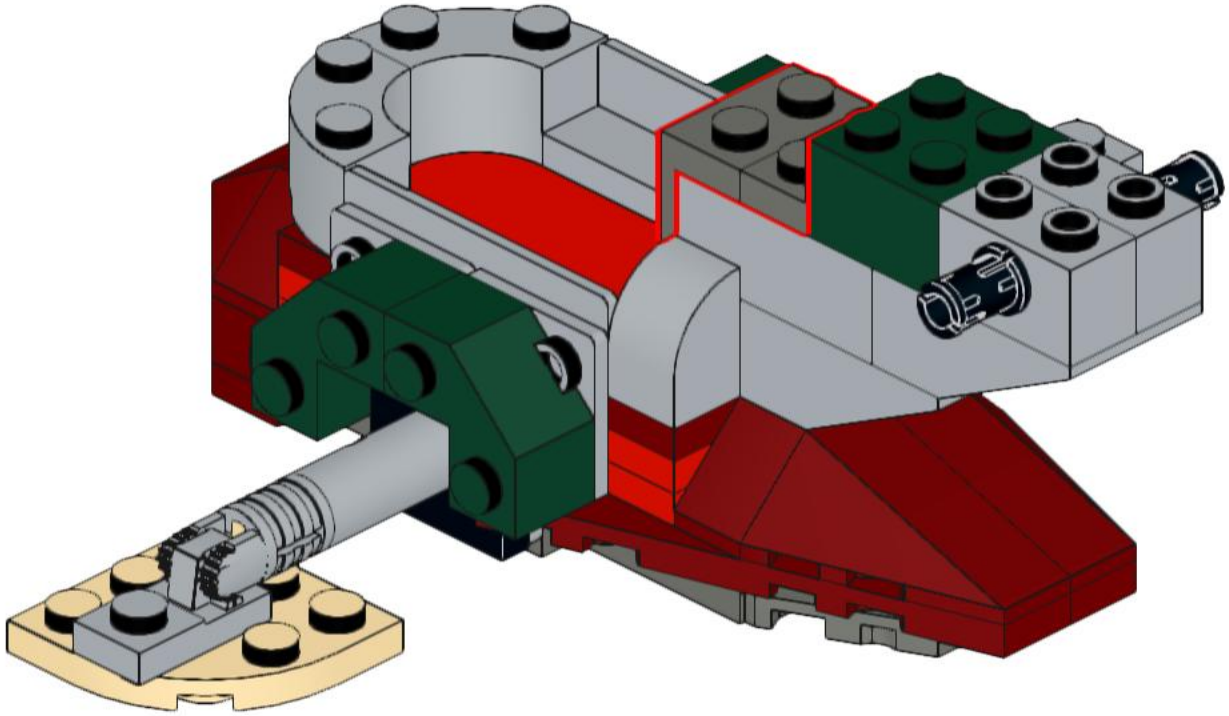

# 26

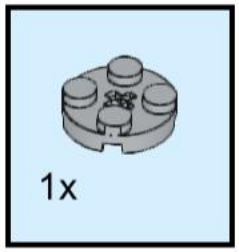


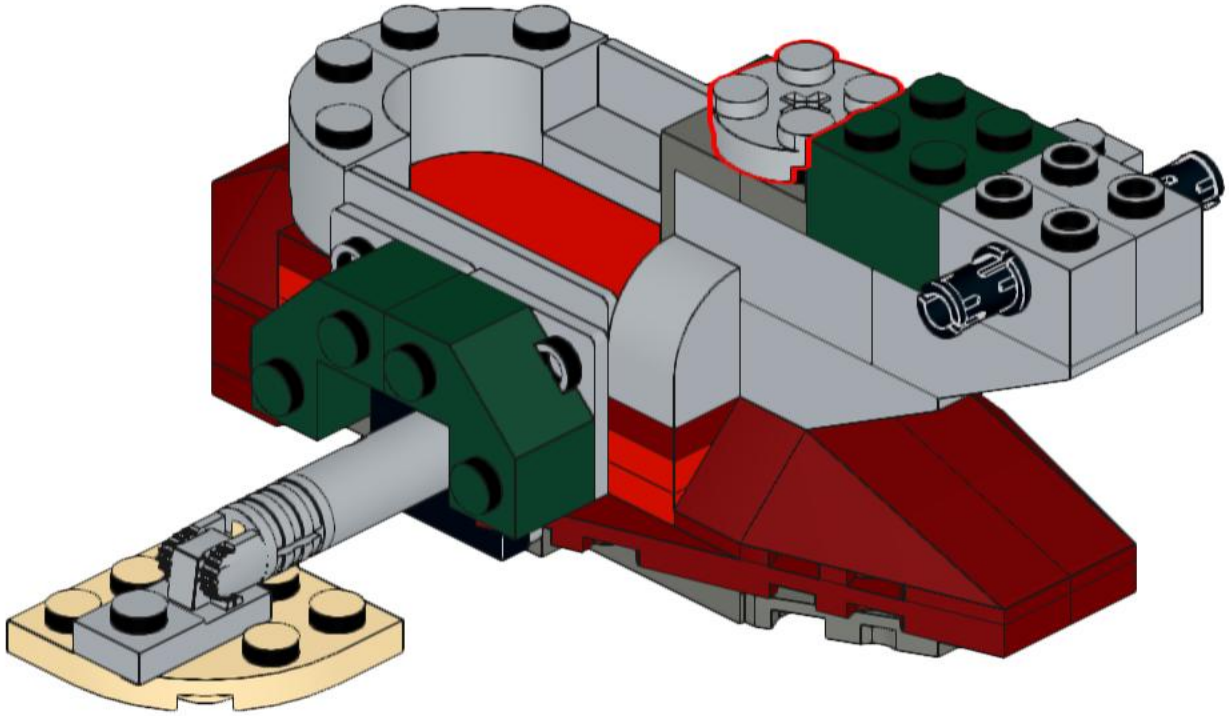

# 27

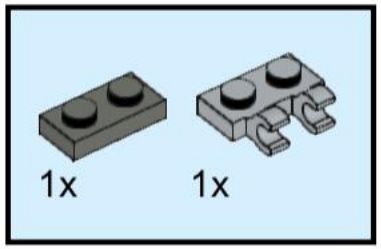


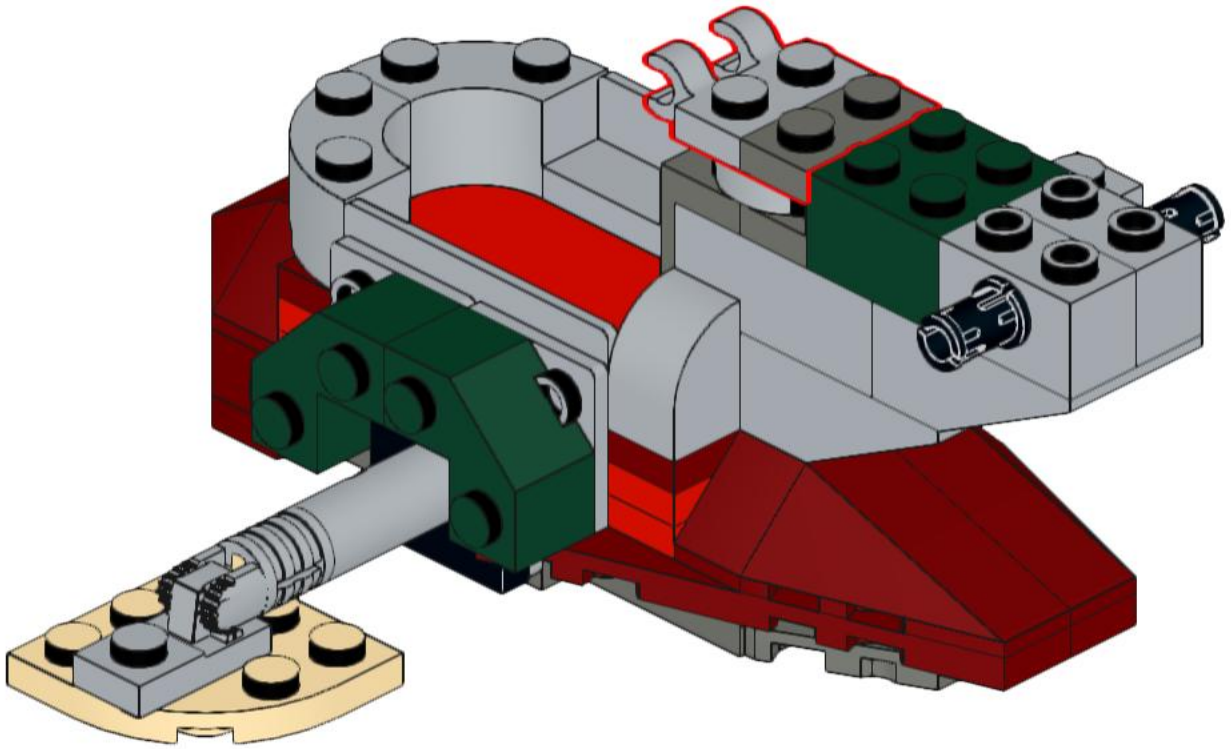

# 28

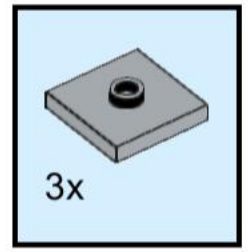


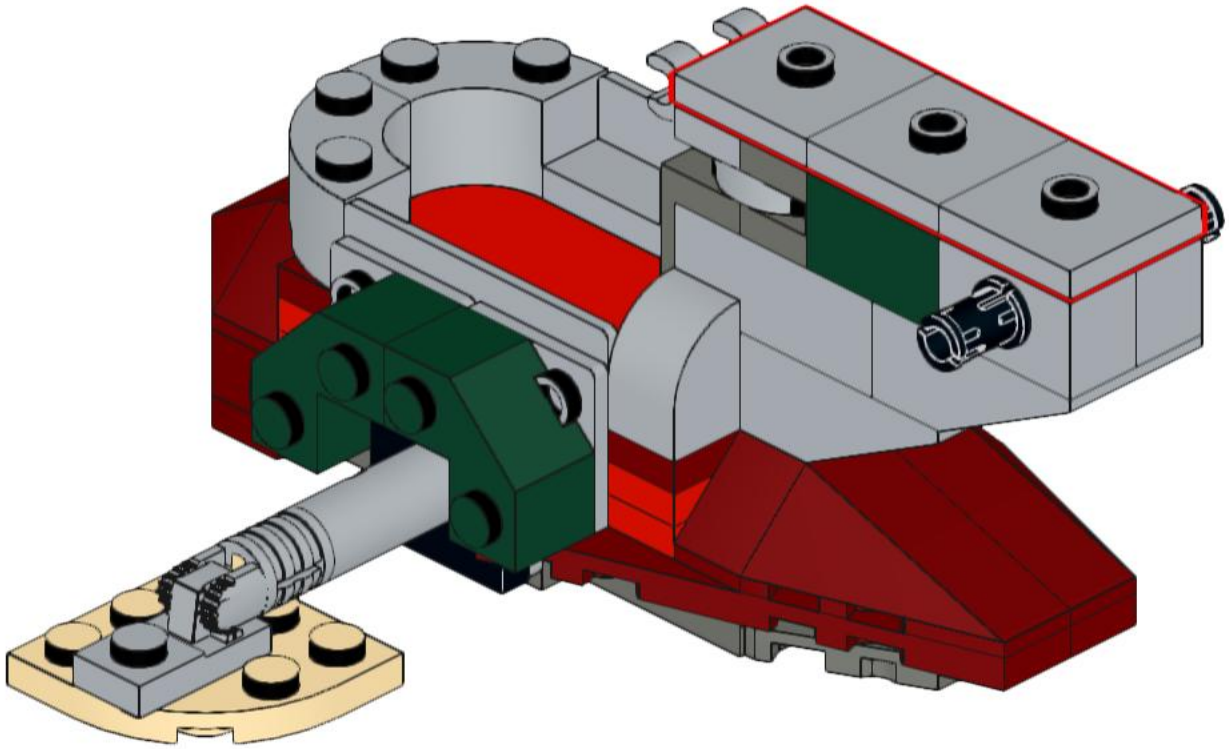

# 29

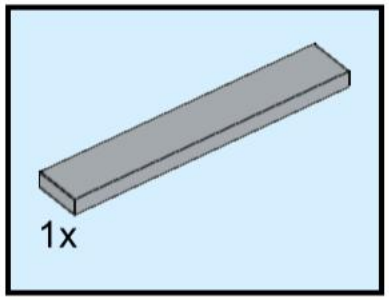


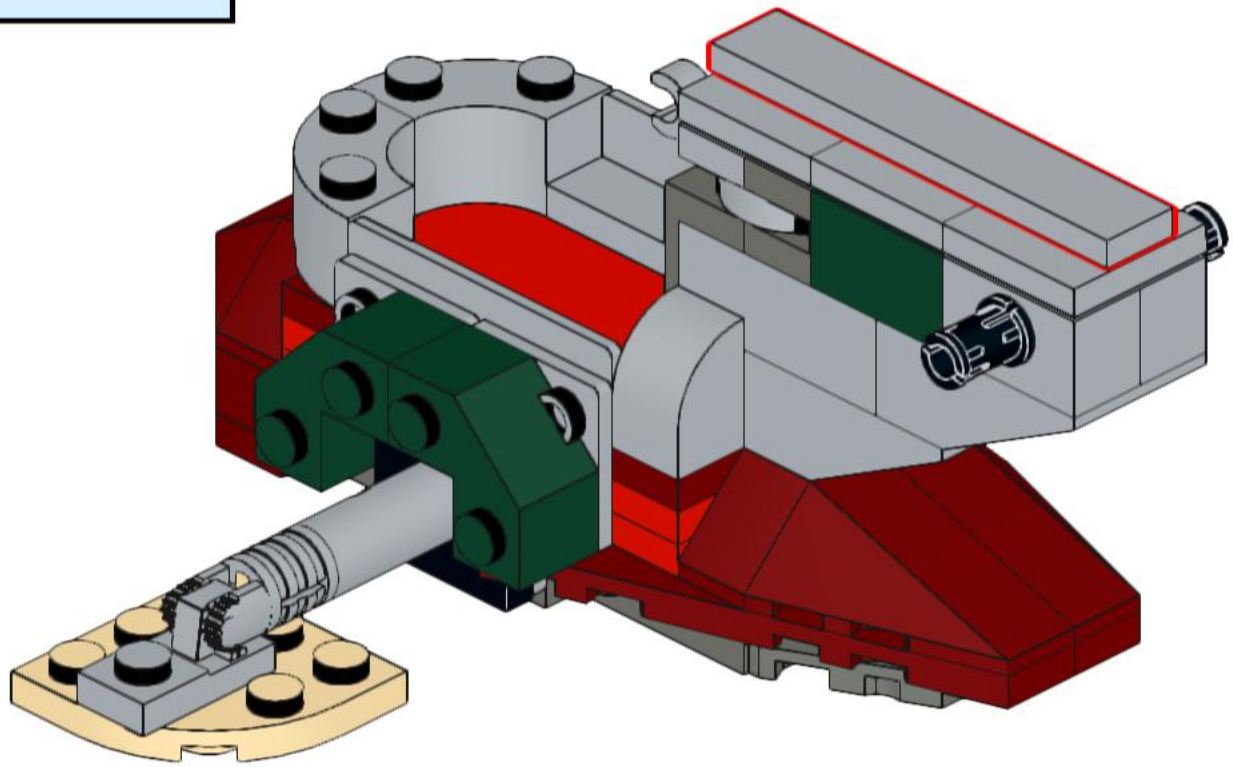

# 30

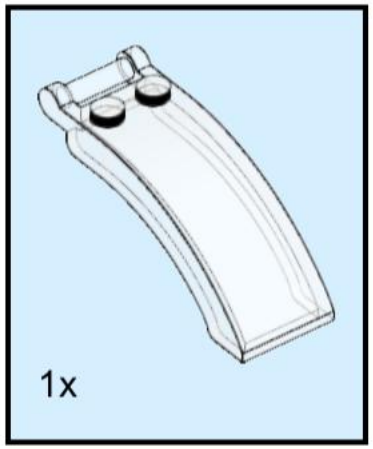


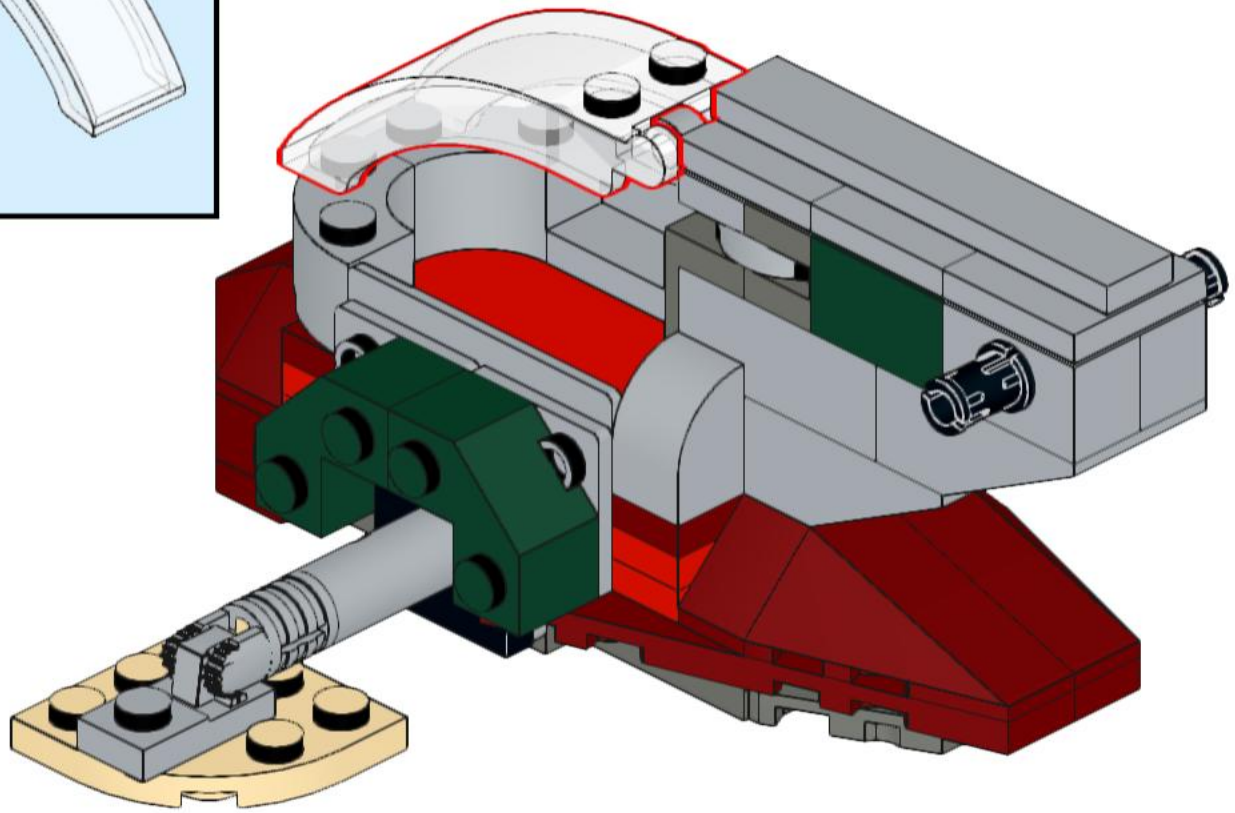

# 31

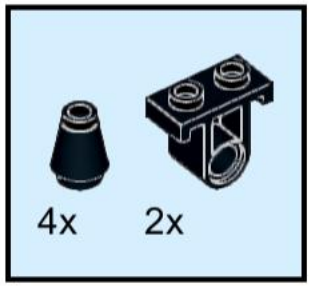


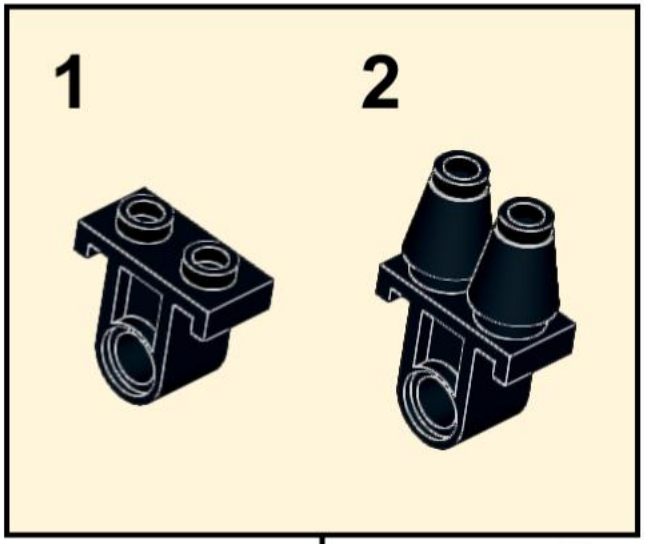


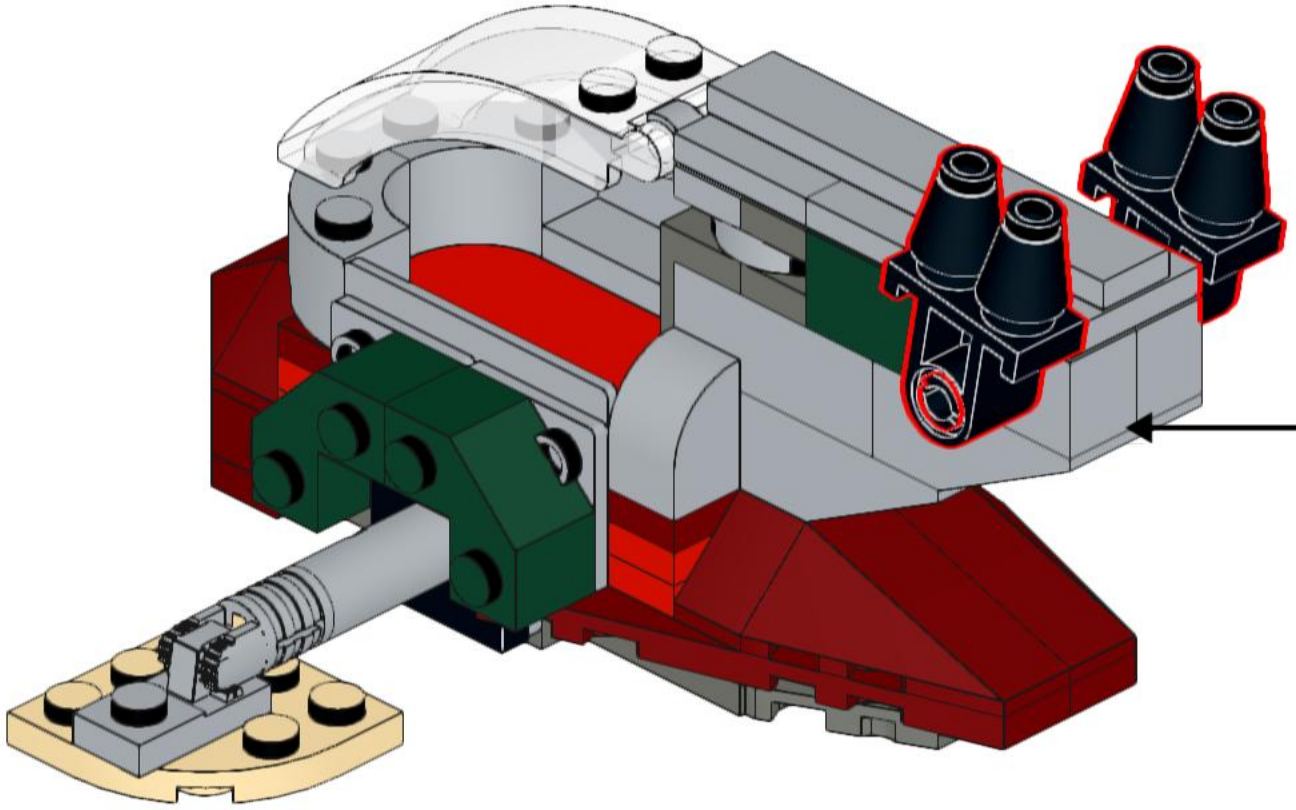

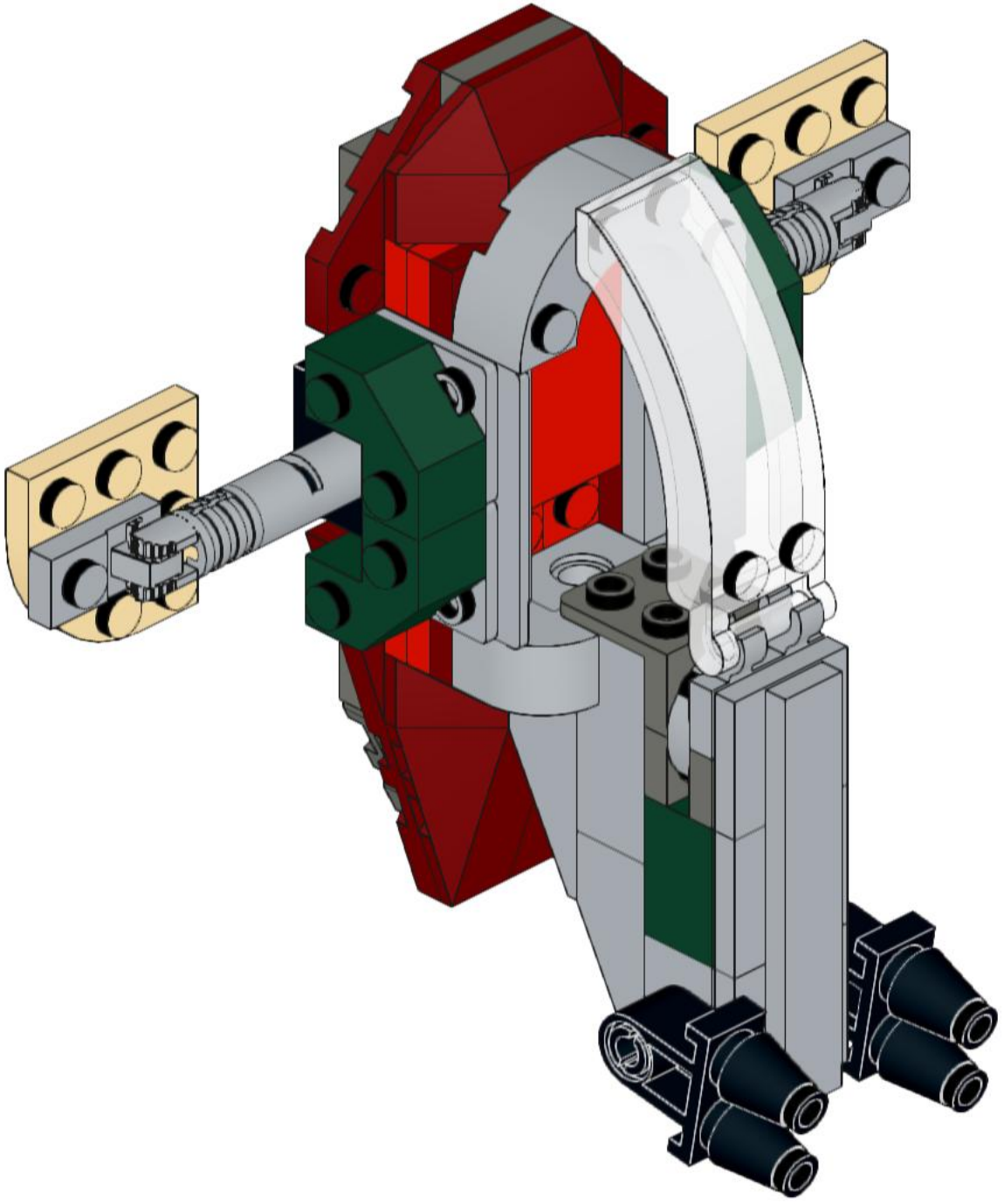





4x
4589b
Black



2x
2780
Black



2x
32529
Black



2x
2460
Black



3x
3023
Dark Bluish Gray



1x
44728
Dark Bluish Gray



1x
3176
Dark Bluish Gray



1x
51739
Dark Bluish Gray



2x
3020
Dark Bluish Gray



1x
3035
Dark Bluish Gray



2x
30553
Light Bluish Gray



2x
62462
Light Bluish Gray

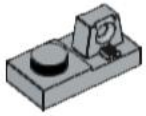

2x
30383
Light Bluish Gray

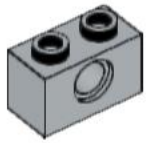

3x
3700
Light Bluish Gray

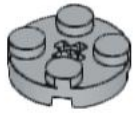

3x
4032
Light Bluish Gray



2x
99781
Light Bluish Gray

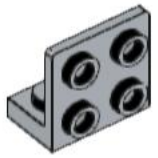

4x
99207
Light Bluish Gray

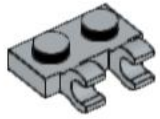

1x
60470b
Light Bluish Gray

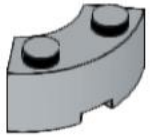

2x
85080
Light Bluish Gray



2x
6091
Light Bluish Gray

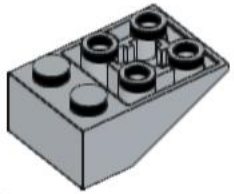

2x
3747b
Light Bluish Gray

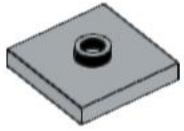

3x
87580
Light Bluish Gray

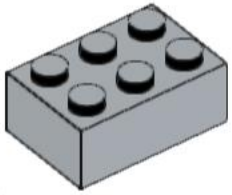

1x
3002
Light Bluish Gray

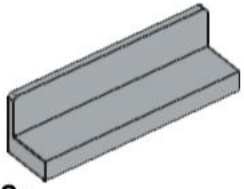

2x
30413
Light Bluish Gray

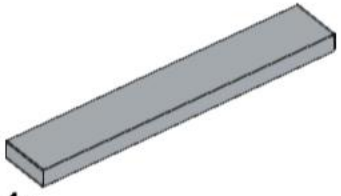

1x
6636
Light Bluish Gray

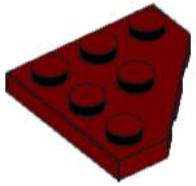

2x
2450
Dark Red



1x
47759
Dark Red

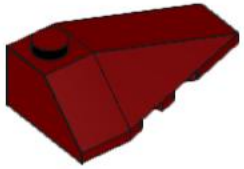

1x
43711
Dark Red

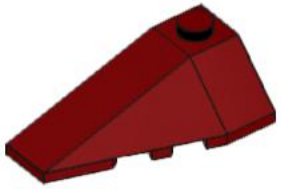

1x
43710
Dark Red

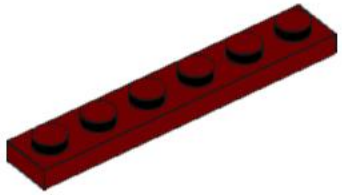

2x
3666
Dark Red

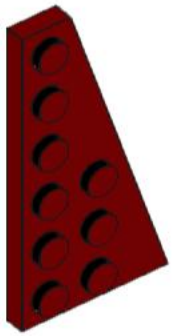

1x
54383
Dark Red

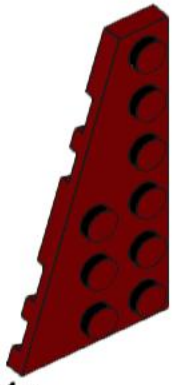

1x
54384
Dark Red

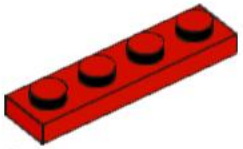

3x
3710
Red

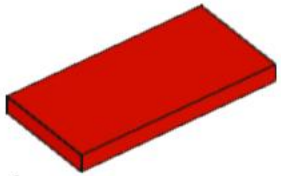

1x
87079
Red

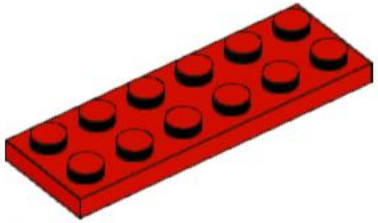

2x
3795
Red



2x
3749
Tan

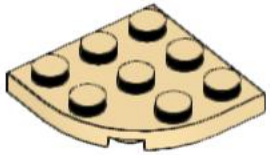

2x
30357
Tan



4x
87620
Dark Green



1x
3003
Dark Green

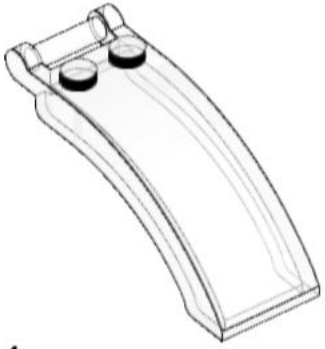

1x
92474
Trans-Clear